JINN FA

# JSL-42ABY

Since 1976

ISO 9001-2000

* Max. Turning Diameter 42mm.
* Both Guide Bush / Non Guide Bush are available for making complicated components.
* With Hydraulic Chuck System on Main Spindle , it accepted poor tolerance bar to save the material cost.
* Deep hole drilling on Sub Spindle side with center cooling system. It has fixed and rotary type.
* The tooling system has two Y axis and Cs Axis. Totally there are 37 tool holders and 19 of them are living tool.
* Cross and Face drilling function are available on Main and Sub Spindle.
* Built-In Spindle with oil cooling system offers high efficiency, low noise and high accuracy environment.

## Machining Types

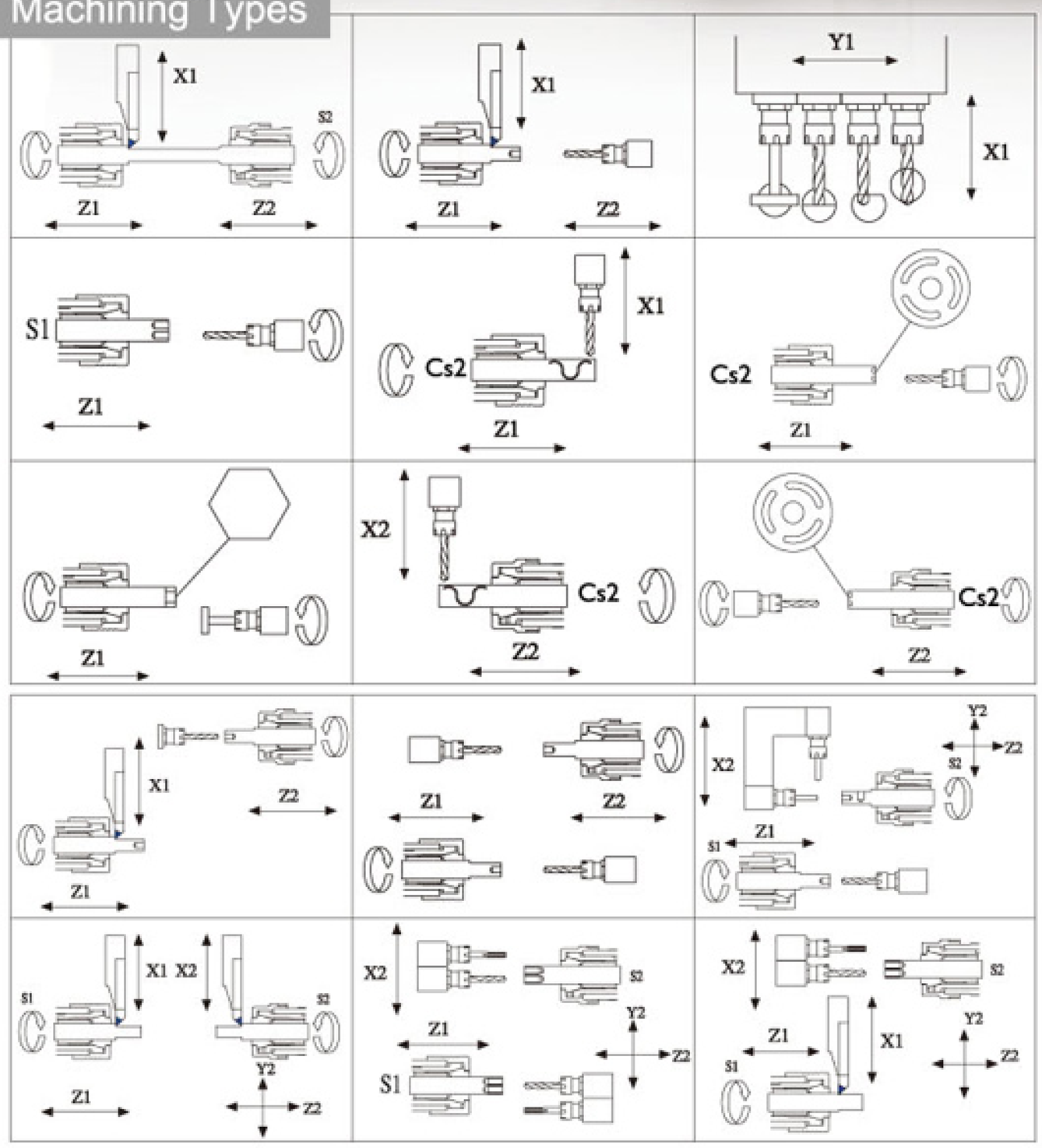


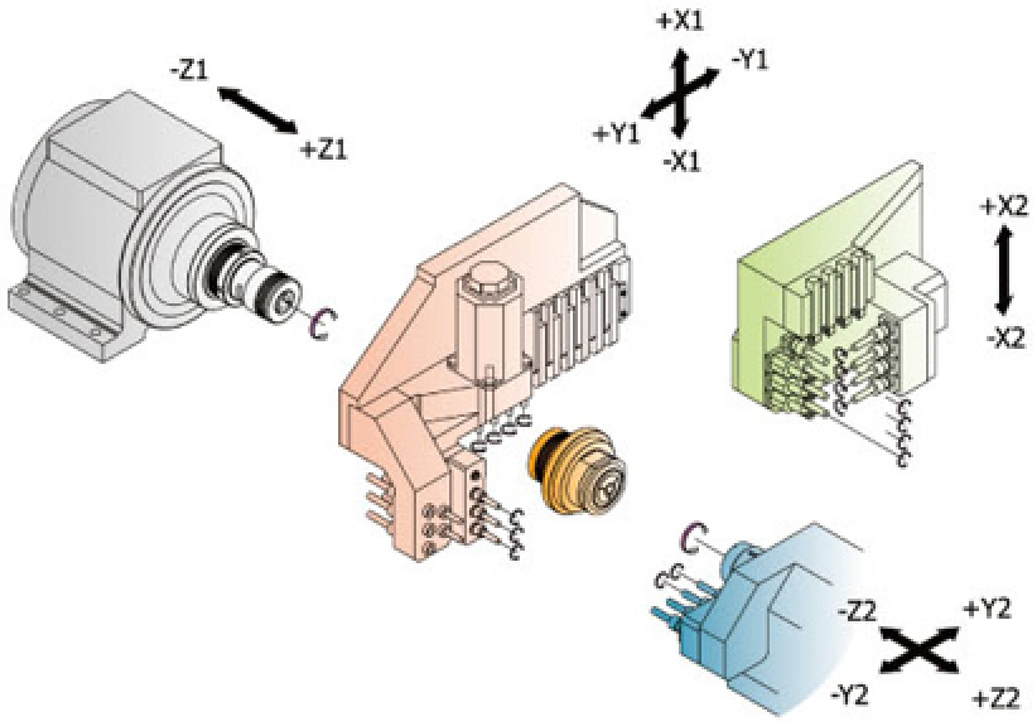

# JSL-42ABY

## SMART Series Specifications

| ITEM | Unit | JSL-42ABY |
|---|---|---|
| Main Spindle Max. Turning Diameter. | mm | 42 |
| Sub Spindle Max. Turning Diameter | mm | 42 |
| Max. Turning Length | mm | Rotary Guide Bush : 200, Non Guide Bush : 125 |
| Main Spindle Max. Drilling Diameter | mm | 13 |
| Sub Spindle Max. Drilling Diameter | mm | 10 |
| Main Spindle Max. Tapping Diameter. | mm | M12 |
| Sub Spindle Max. Tapping Diameter | mm | M10 |
| Max. Side Drilling Diameter | mm | 10 |
| Max. Side Tapping Diameter | mm | M10 |
| External tool holder | pcs | 6 |
| Inner tool holder | pcs | 5 |
| Side Drilling tool holder | pcs | 4(5) |
| Sub Spindle External Tool Holder | pcs | 4 |
| Sub Spindle Inner Tool Holder | pcs | 3 |
| Sub Spindle Side Drill Tool Holder | pcs | 4 |
| Sub Spindle Face Drill Tool Holder | pcs | 4 |
| Tool Size | mm | 20x20x95~155 |
| Control Axis | pcs | C1/(C2)/X1/Y1/Z1/X2/Y2/Z2 |
| Main Spindle Bore | mm | 58 |
| Main Spindle Speed | rpm | 15~6000 |
| Sub Spindle Bore | mm | 56 |
| Sub Spindle Speed | rpm | 15~6000 |
| X/Z/Y Axis Rapid Traverse | m/min | 18 |
| Side Drilling Speed | rpm | 4000 |
| Sub Spindle Side Drilling Speed | rpm | 3000 |
| Main Spindle Motor | kw | 7.5(15) |
| Sub Spindle Motor | kw | 7.5 |
| X1/Z1 Motor | kw | 1.6 |
| Y1 Motor | kw | 1.4 |
| Side Drilling Motor | kw | 1.6 |
| X2/Z2 Motor | kw | 1.4 |
| Y2 Motor | kw | 1.4 |
| Sub Spindle Side Drilling Motor | kw | 1.6 |
| Hydraulic Motor | kw | 0.75 |
| Coolant Pump | kw | 2.3x2 |
| Power Requirement | kw | 40 |
| Lubrication Capacity | L | 2 |
| Coolant Tank Capacity | L | 480 |
| Machine Dimension | mm | 3380x2455x2155 |
| Weight | kg | 7500 |

## Standard Accessories

Main System
- Main Spindle 5° Multiple Orientation
- External Tool holder (6-tool)
- Internal Tool holder (5-tool)
- Side drilling tool holder (4- tool)

Sub System
- Sub Spindle 5° Multiple Orientation
- External Tool holder (6-tool)
- Internal Tool holder (3-tool)
- Side drilling tool holder (4- tool)

Parts Catcher
Tool & Tool Box
Lighting Device
Coolant Device
Coolant Inspection
Cut off inspection
Non guide bush holder
Main/sub spindle hydraulic cylinder
Lubrication device
Operation manual
Collet chuck
Base block 8 pcs

## Optional Accessories

Simultaneously Rotary Guide Bushing holder
Chip Conveyor
Spindle Cooling system
Main Spindle End-Face Eccentric drill/tap tool holder (3-position)
Sub Spindle End-Face Eccentric drill/tap tool holder (4-position)
Sub Spindle side drilling tool holder (4-position).
Sub Spindle side center cooling device (1-position).
Sub Spindle side drilling/milling tool holder( 4-position)
Voltage Stabilizer
Transformer
Spindle oil cooling system
Multiple bar feeder
Sub spindle C axis.
Main spindle C axis.

## Dimensions

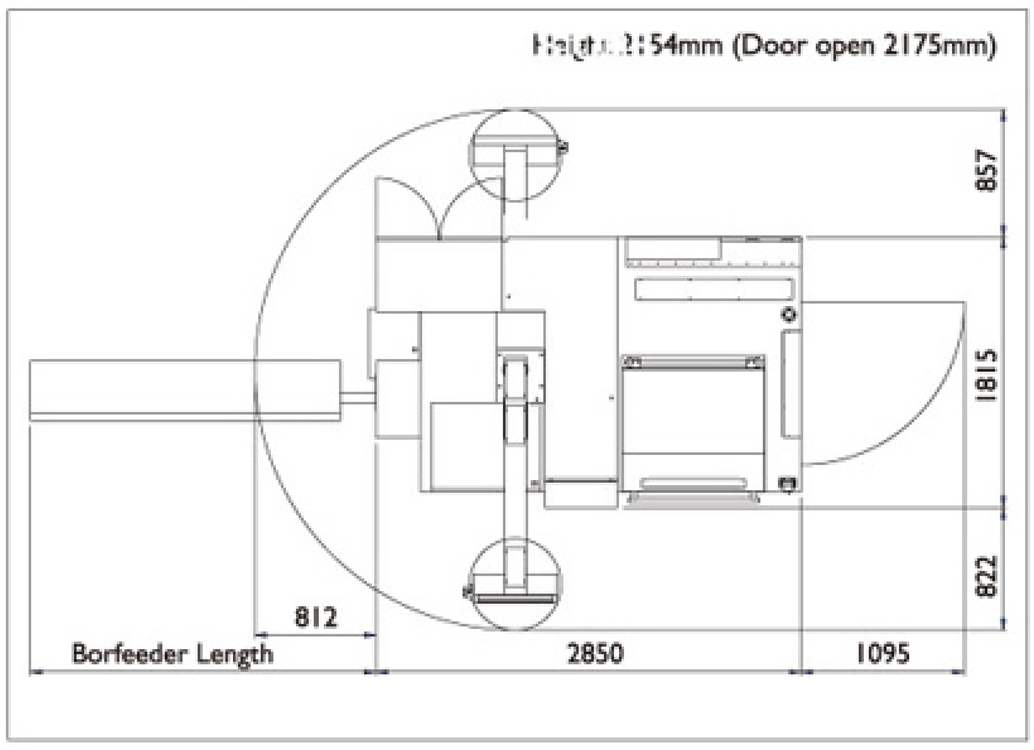



JINN FA
縉鍌工業股份有限公司
JINN FA MACHINE INDUSTRIAL CO., LTD.
彰化縣福興鄉元中村橫圳巷12號

12, Hengching Lane, Yuanchung Village,
Fushing Hsiang, 50606 Changhua Hsien, Taiwan.
TEL: 886-4-779-2211 (REP)
FAX: 886-4-779-3386
http://www.jinnfa.com
E-mail: jinnfa@ms18.hinet.net